SEAL•A•TRON

Shrink Packaging Equipment

MEMBER PMMI

MANUFACTURED IN United States of America

PREMIUM MACHINERY *at a Reasonable Price!*

MODEL

S-3230

SEMI-AUTOMATIC

L-BAR SEALER

Seal Bar Dimensions:
32"W x 30"L x 8"H

Standard Features:

- Hot Knife Seal System
- Dual Mag-LOK Extra Strong Magnets
- Lightly Balanced Seal Head Pivot
- EZ-Perf Venting Pin Perf
- Product Discharge Conveyor with Soft Start
- Motorized Seal Table Adjustment
- Proximity Sensor Switching for Impulse Seal Wires
- Anodized Aluminum Seal Head with Film Clamps
- Heavy Duty Welded Frame with Locking Casters

Options:

- Scrap wind-up
- UL Approved Control Panel
- Powered Film Unwind(Suggested for rolls over 24"W)
- Adjustable Inverting Plow
- Roller Table Loading Infeed
- Electronic Seal Head w/ Push Button Sealing Cycle
- Heavy Product Upgrades
- Additional Seal Length (Consult Factory)

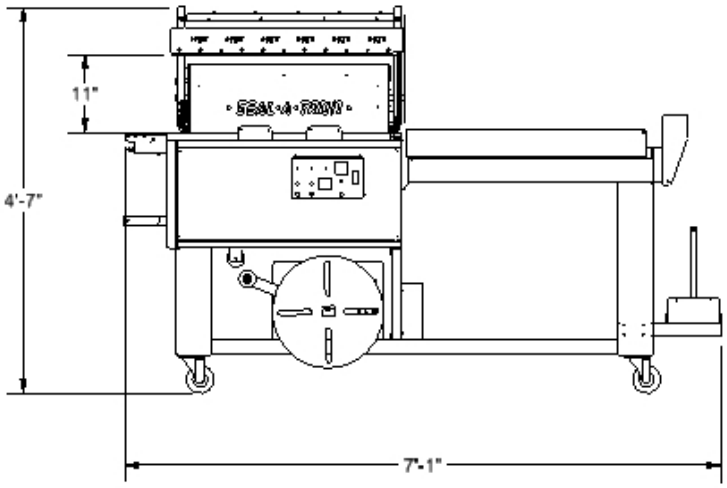

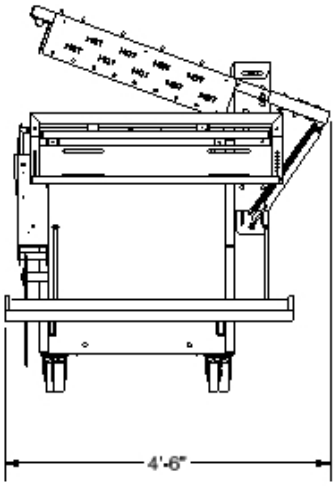

220 VAC Single Phase

BUILT FOR SERIOUS *Performance*

Seal-A-Tron Corporation™ • 3815 S.E. Naef Road. • Portland, OR 97267 • Phone (503) 652-5200 • Fax (503) 905-1331

Visit us on the Internet at: http://www.seal-a-tron.com

june 2016